NOTES:
1. COMBINATION WATER SERVICE TO CONFORM TO NFPA 20
2. COMBINED WATER SUPPLY TO CONFORM TO IPC WITHIN THE BUILDING
3. PROVIDE REDUNDANT BFP ON MAIN SERVICE, NPCW, AND NPSCW SYSTEMS.
4. PROVIDE A SHUTOFF VALVE UPSTREAM OF THE BFP ASSEMBLY TO FACILITATE MAINTENANCE.

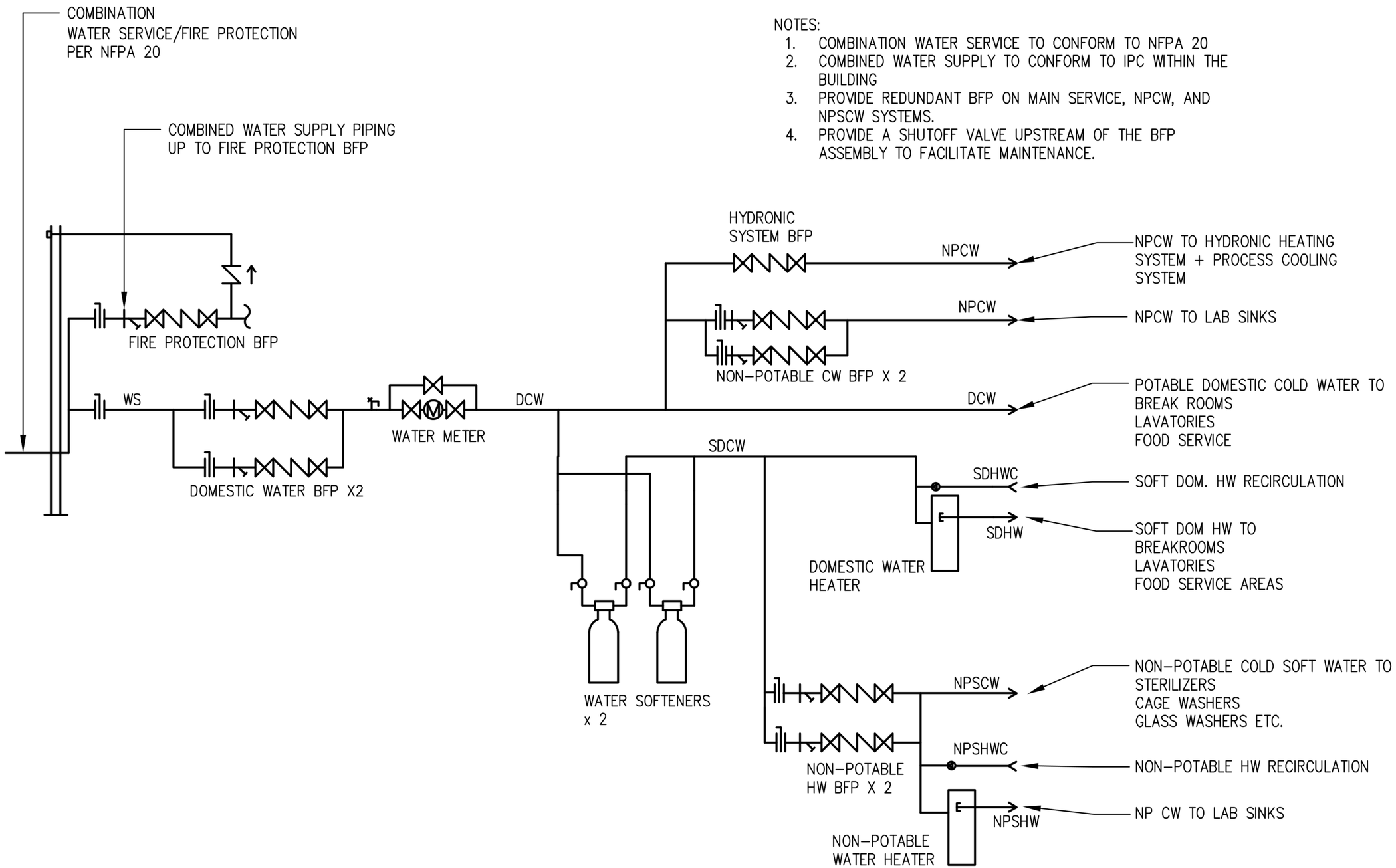

1 PLUMBING SUPPLY WATER SCHEMATIC
SCALE: NONE

DWN BY:
CKD BY:

BUILDING WATER SUPPLY SCHEMATIC

MAINTENANCE
CAMPUS FACILITIES
UNIVERSITY OF MISSOURI-COLUMBIA

PROJECT NUMBER

SHEET

of