336115 CONDUIT WALL PENETRATION DETAIL.dwg

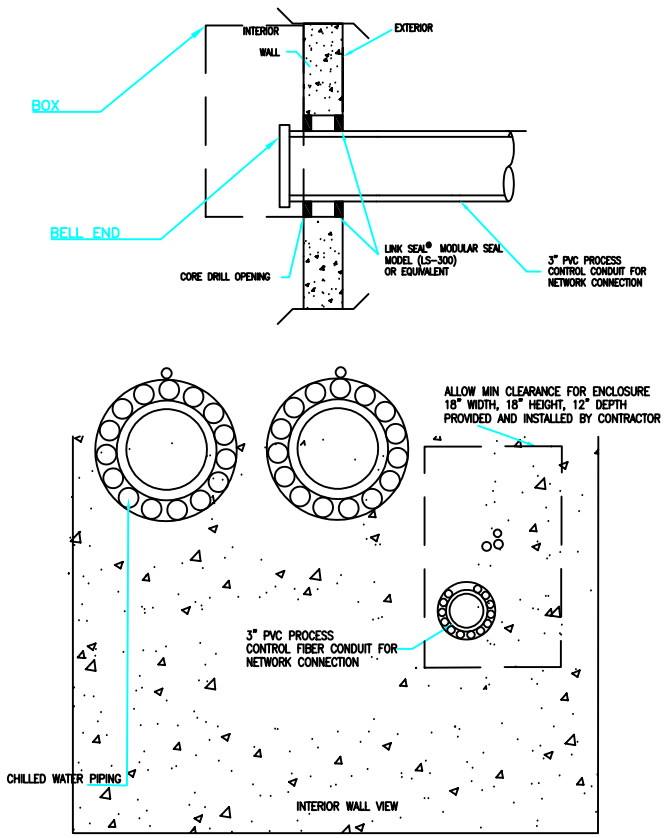

WALL PENETRATION FOR FIBER OPTIC CONDUIT
NO SCALE

NOTE: MUST MAINTAIN A BENDING RADIUS OF NO LESS THAN 8" FOR INSTALLED CABLE

REV	DATE	Construction Standard Conduit Wall Penetration	
0	8/24/2021		
		Energy Management Campus Facilities UNIVERSITY OF MISSOURI–COLUMBIA	DRAWING NOT TO SCALE DATE: 8/24/2021
DRAWN BY: AM			
CHECKED BY: TG			