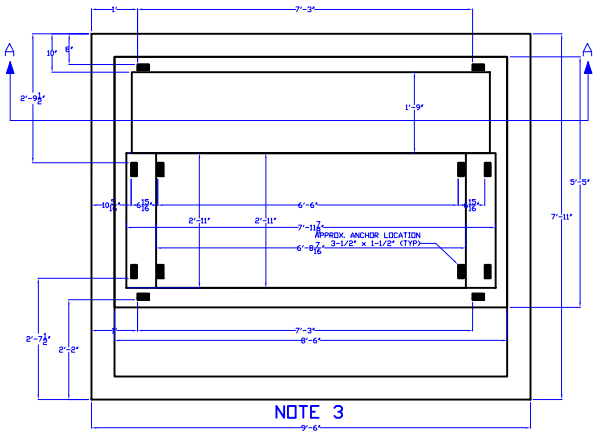

SWITCH PAD

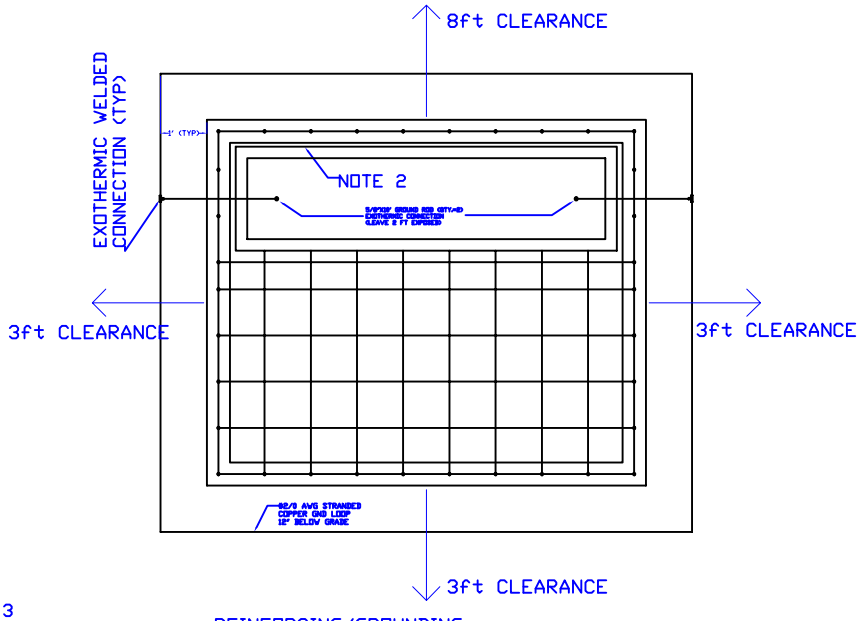

REINFORCING/GROUNDING

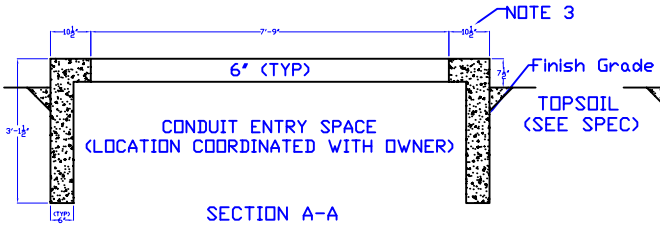

SECTION A-A

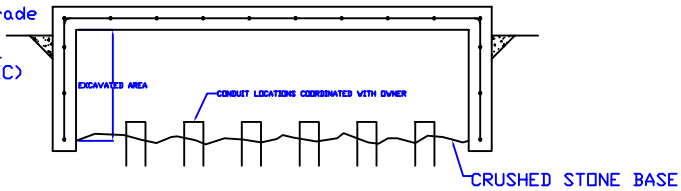

NOTES:
1. INSTALL #4 REBAR 12" O.C. IN BOTH DIRECTIONS.
2. INSTALL EXTRA REBAR LOOP AROUND WINDOW 3' FROM INSIDE EDGE.
3. EXTEND PAD 16" FOR UNITS WITH LOW VOLTAGE ENCLOSURE.
4. PRECASE PAD IS ALLOWABLE

REV	DATE
0	5/16/08
1	1/9/12
2	10/8/13
3	
DRAWN BY:	JS
REVISED BY:	ZK

Construction Standard
5&6-Way Switchgear Pad Detail

337700

UNIVERSITY OF MISSOURI–COLUMBIA
Campus Facilities
Energy Management

DRAWING
NOT TO SCALE

DATE: 5/6/08